PAROLA

Gae Aulenti, Piero Castiglioni, 1980

Designed by Gae Aulenti and Piero Castiglioni, the Parola lamp features three different kinds of glass working processes: opaline blown glass for the adjustable shade, natural glass for the stem and natural beveled crystal for the base. It is an exemplary model of technical integration between artisan and industrial skills.

RELATED PRODUCTS

PAROLA

Wall Lamp

PAROLA

Suspension Lamp

PAROLA, PAROLONA

Floor Lamp

TECHNICAL SHEET

Table lamp with dimmer. Transparent glass base with transparent borosilicate glass stem. Diffuser in amber or white opaline blown glass. Braided fabric cable, black dimmer and switch.

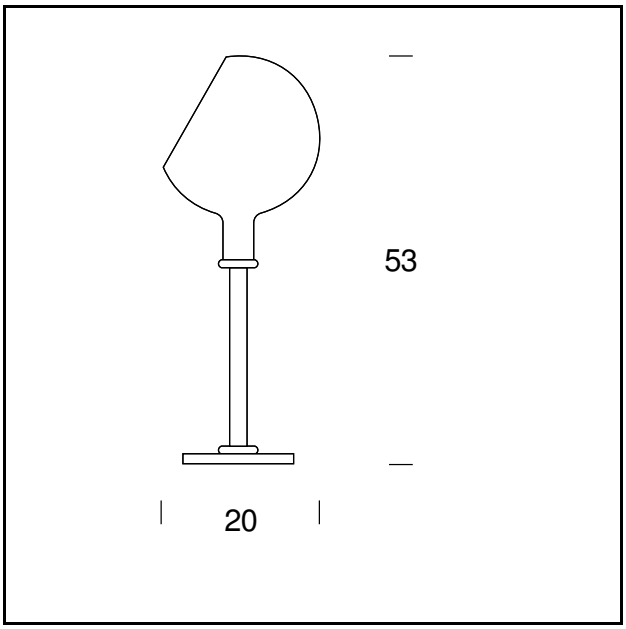

MODEL NAME: Parola

CODE: M2658+V2689..

DIMENSIONS: ø 20 × 53 cm

MATERIALS: Glass

COLORS

- Amber
- White

BULB: 1×60W (HA, LED) E14

DIMMER: Dimmer

CERTIFICATIONS AND SYMBOLS:

IP20 Classe II

Subject to technical modifications and modifications to content