CHESHIRE

GamFratesi, 2013

It echoes the studio's Nordic imprint in its simplicity and functional aspects. The opaline polycarbonate diffuser ensures soft lighting, while the colored one spreads the light downwards in the table and floor versions or upwards in the hanging model.

RELATED PRODUCTS

CHESHIRE

Floor Lamp

CHESHIRE

Suspension Lamp

TECHNICAL SHEET

Table lamp. Opal lower diffuser. Lampshade in polycarbonate. Stem and base in metal. Lampshade, stem and base white (RAL 9010 matt), black (RAL 7021 matt). Transparent cable and plug.

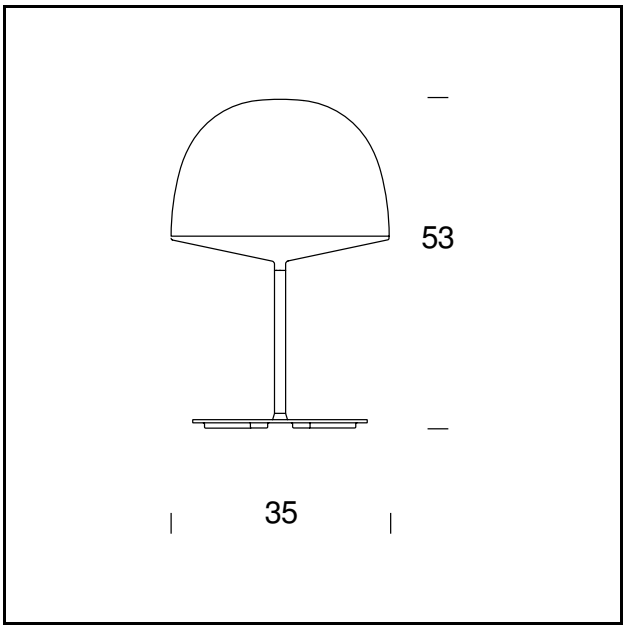

MODEL NAME: Cheshire

CODE: 4251..

DIMENSIONS: ø 35 × 53

MATERIALS: Polycarbonate, Metal

COLORS

- Black - RAL Code: RAL 7021 Matt
- White - RAL Code: RAL 9010

BULB: 3×23W (FL) E27

PLUG: Transparent

POWER CORD: transparent

CERTIFICATIONS AND SYMBOLS:

IP40

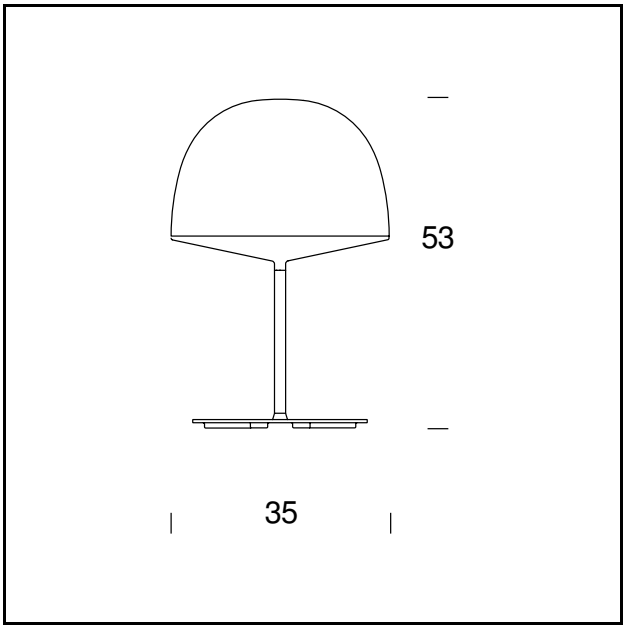

MODEL NAME: Cheshire Led

CODE: 4314..

DIMENSIONS: ø 35 × 53

MATERIALS: Polycarbonate, Metal

COLORS

- Black - RAL Code: RAL 7021 Matt
- White - RAL Code: RAL 9010

BULB: 17,5W Led (2700 K, CRI>80, Lm 1650)

PLUG: Transparent

POWER CORD: Transparent

DIMMER: Transparent

CERTIFICATIONS AND SYMBOLS:

CE EAC IP40

Subject to technical modifications and modifications to content